T F 20. In fragile areas, you should select routes that avoid fragile terrain, critical wildlife habitat, or any area where signs of your passage will invite others to follow.

T F 21. Camp layout is important at remote sites. Keep cooking, sleeping, and gear storage areas as close together as possible so any trampling that occurs will be concentrated.

T F 22. Most campsites can recover completely from a limited amount of use.

T F 23. Avoid lightly impacted trails and campsites to allow impacts to recover over time.

Pack It In, Pack It Out

T F 24. Twist-ties are very handy in the backcountry and help to secure food that may otherwise spill and attract animals. Carry extra twist-ties in case you lose some.

T F 25. Garbage is food waste left after cooking. It should be burned or buried, since this will reduce food odors that may attract animals.

Properly Dispose of What You Can't Pack Out

T F 26. The four guiding principles for sanitation are avoid polluting water sources, eliminate contact with insects and animals, maximize decomposition, and minimize the chances of social impacts.

T F 27. An individually dug cathole is the most widely accepted means of backcountry waste disposal. A cathole should be 4 to 8 inches deep and at least 20 feet from a water source.

T F 28. Urine has little direct effect on vegetation or soils.

T F 29. Burying used toilet paper or feminine hygiene products is unacceptable because of slow decomposition and the high likelihood that animals will dig it up. Therefore, a good method is to pack it out in double-wrapped plastic bags.

T F 30. Hot water and a little elbow grease can tackle most backcountry cleaning chores. Soap is unnecessary for most dishwashing and is difficult to rinse completely.

T F 31. Fish and game viscera are a natural part of the ecosystem and may be placed where they will decompose quickly or be consumed by animals or birds.

T F 32. The most widely used method of food storage in bear country is to hang food at least 10 to 12 feet off the ground and 4 to 5 feet away from the trunks of trees.

T F 33. Use a sump hole for depositing gray water from cleaning dishes in bear country to concentrate wastewater and localize odor.

Leave What You Find

T F 34. You should minimize site alterations and not construct lean-tos, tables, chairs, or other rudimentary improvements at your campsite.

T F 35. In national parks and other public lands, federal law protects archeological, cultural, and historic artifacts, and it is illegal to excavate, disturb, or remove these resources.

Minimize Use and Impact of Fires

T F 36. In alpine zones, fires should never be built.

T F 37. At established campsites, use existing fire rings to concentrate the impact of the fire and keep surrounding areas in a natural condition.

T F 38. A Leave No Trace fire may include a portable fire pan, a mound fire, or a pit fire.

T F 39. Fire pans are metal trays with sides high enough (more than 3 inches) to contain wood and ashes. They were first used by river runners.

T F 40. The advantage of a mound fire is that it can be built on durable surfaces such as flat exposed rock or ledge, or on a nonvegetated surface such as leaf litter or pine needles, without damage to the surface or soil.

SUBJECT: PIONEERING

About Rope

Pioneering projects should use proper rope. Rope is expensive, however, and somehow seems to disappear in the woods. Here is a way to solve that:

Step 1. Cut pioneering ropes into 15-, 20-, 25-, and 30-foot lengths. When planning pioneering projects for camp, you can estimate how many of each length might be needed.

Step 2. Whip the ends of the ropes.

Step 3. Paint the ends of the 15-foot lengths with red paint. The word “red” has three letters, each letter stands for 5 feet—3 multiplied by 5 is 15. Use blue paint for the 20-foot lengths (four letters multiplied by 5 feet), green for the 25-foot lengths, and purple for the 30-footers.

Step 4. Establish the firm rule, “We never cut rope.” If a rope is too short, use a longer rope. If some rope is left over in a lashing, use a shorter rope or tuck the ends. This system really works. Camps have actually worn out rope from constant use.

If an outdoor skills director expresses concern about rope, the Scouts will recognize its importance. Check The Boy Scout Handbook, Fieldbook, or Pioneering merit badge pamphlet and decide on an official way to coil rope in the camp. Insist on it! Build a special rack for storing rope in the outdoor skills area. Wooden pegs driven into holes bored in a plank or slab will do nicely. Paint the ends of the pegs with the color of the whippings, and you can keep things organized.

Some special projects such as the monkey bridge require special ropes and equipment. Ropes for these projects should be carefully measured, cut, whipped, tagged, and bundled together as a kit. This will keep things from getting mixed up.

Learn to Tie Knots

Learning to tie knots doesn't have to be dull. Demonstrate the following knot-tying games or others you are comfortable with.

- Using string, transport a paper cup of water from one table to another at least 6 feet away. The cup may not be punctured or touched by anything other than the string.
- Package wrapping. This may sound too simple. But, when the package is a basketball or soccer ball, the task takes on a new challenge. Use twine and newspaper. Each package is wrapped by two people, using only one hand each.
- Knot races. Depending on the size and age of a troop, some knot games may not be practical. However, the following list should cover any level of knot-tying skill.

1. Hold a relay with each member tying the same knot at one end of the room and returning to the other end of the room to tag the next patrol member.
2. Each patrol, working as a team but with each member tying only one knot, ties all the knots required.
3. Tie the same knots as above, but behind your back.
4. Two Scouts work together to tie a clove hitch around a tree or a pole. The twist is that each can put only one hand on the rope and cannot let go of the rope until the hitch is secure.

Practice Knot Board

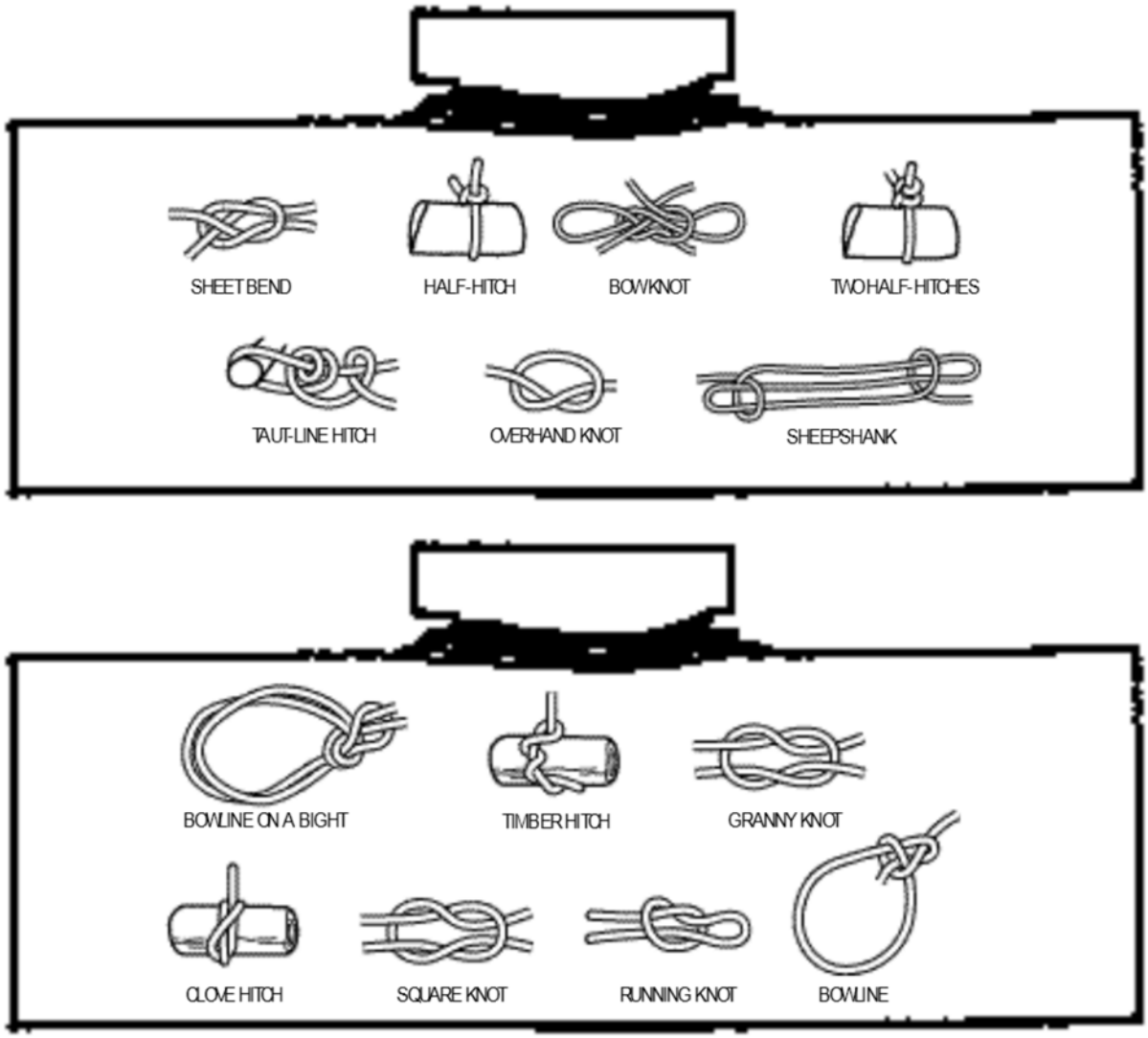

Knot-Tying Relay

Drive two stakes into the ground about 30 feet apart. If this is played indoors, two heavy chairs can serve as stakes.

Run like any relay. Scout No. 1 ties a rope to the stake with a clove hitch and ties a bowline in the other end. Scout No. 2 ties a rope to the bowline with two half-hitches. Scout No. 3 ties on the third rope with a square knot. Scout No. 4 uses a sheet bend to tie the third and fourth ropes together (the sheepshank comes later). Scout No. 5 ties the fourth rope to a log on the ground with a timber hitch. Scout No. 6 ties the fifth rope to the other end of the log with a slipknot. Scout No. 7 ties the fifth and sixth ropes together with a fisherman's knot. Scout No. 8 ties the sixth rope to the other stake using a taut-line hitch, leaving it loose. The patrol leader then shortens the third rope with a sheepshank. Finally, the log is lifted off the ground by working the taut-line hitch.

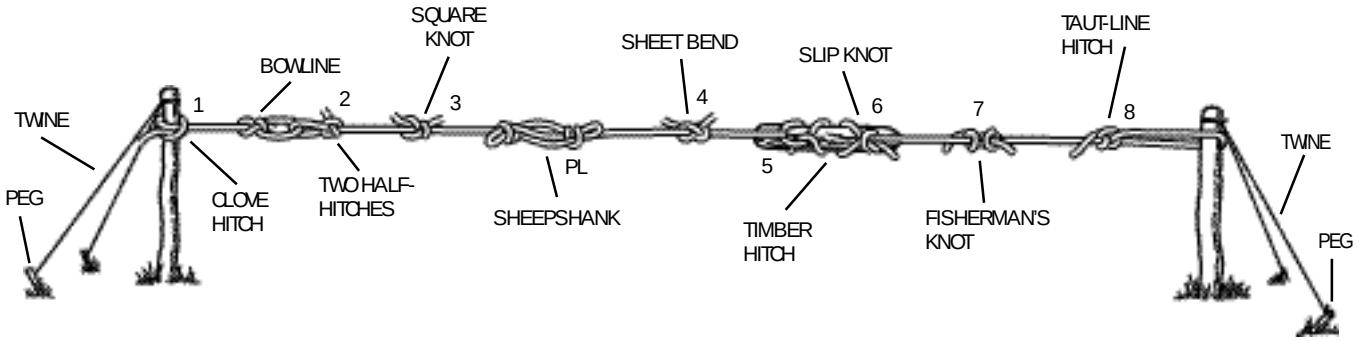

Constructing a Catapult

There are two keys to successfully constructing this catapult:

- Make all lashings proper and tight.
- Follow all directions and dimensions.

Catapult Parts List

Quantity	Part	Size
2	A	5-inch diameter by 10 feet long
1	B	4-inch diameter by 7 feet long
1	C	4-inch diameter by 5 feet long
2	D	4-inch diameter by 11 feet long
2	E	3-inch diameter by 10½ feet long
1	F	3-inch diameter by 5 feet long
2	G	3-inch diameter by 12 feet long
1	H	3-inch diameter by 6 feet long
2	I	3-inch diameter by 6 feet long
1	J	2-inch diameter by 3 feet long
1	K	2-inch diameter by 2½ feet long
1	L	18-inch diameter by 2 feet long (approximate length—cut to balance)
2	M	2-inch diameter by 6 feet long

Catapult Construction

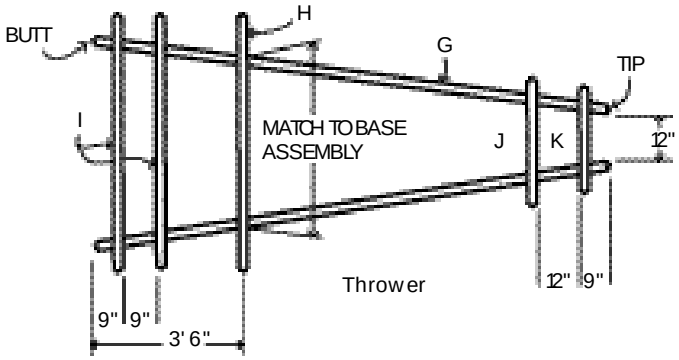

Thrower

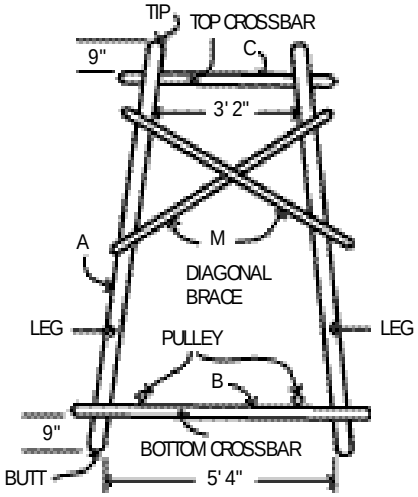

Trestle

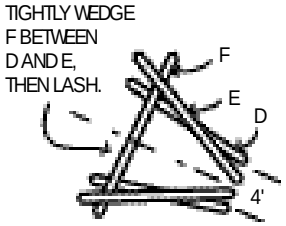

Detail view

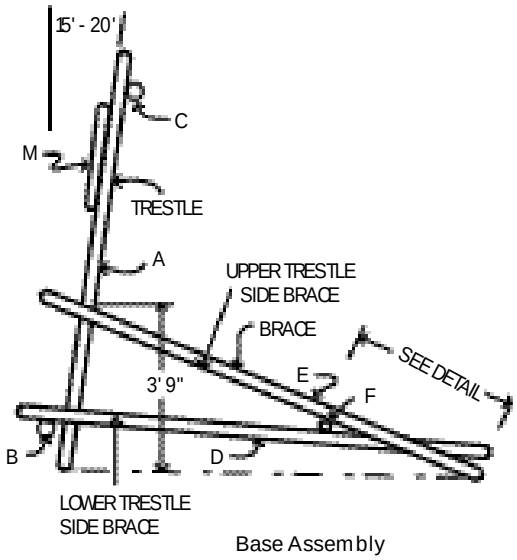

Base Assembly

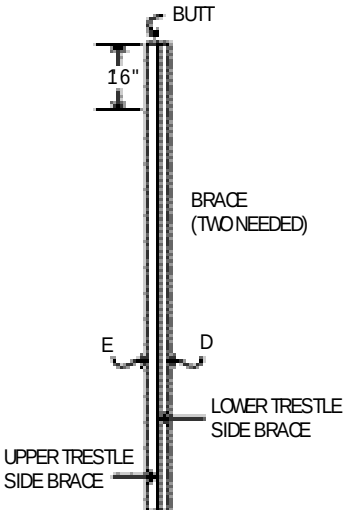

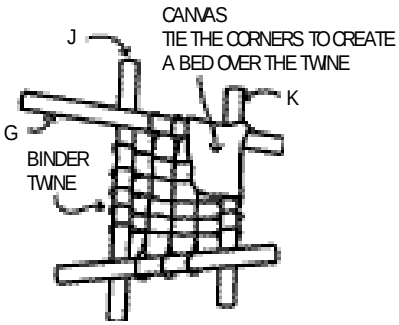

Basket—Make into a pocket

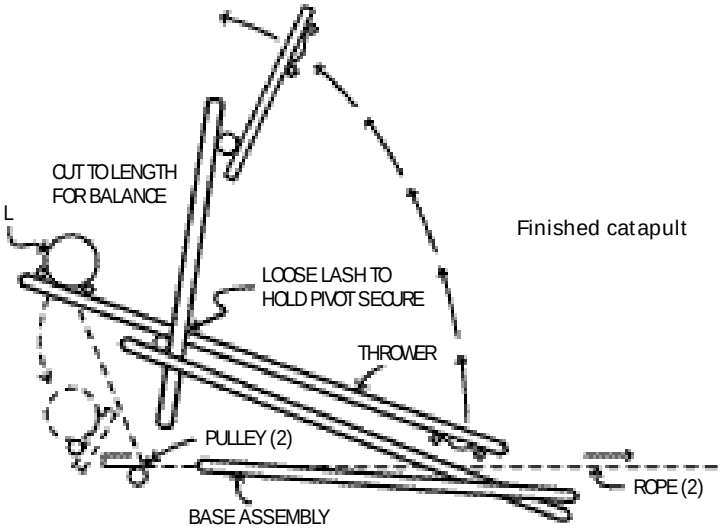

Finished catapult

*MUST BE GREEN HARDWOOD AND AT LEAST 2 INCHES DIAMETER AT THE TIP.

Pioneering Projects

Signal Tower

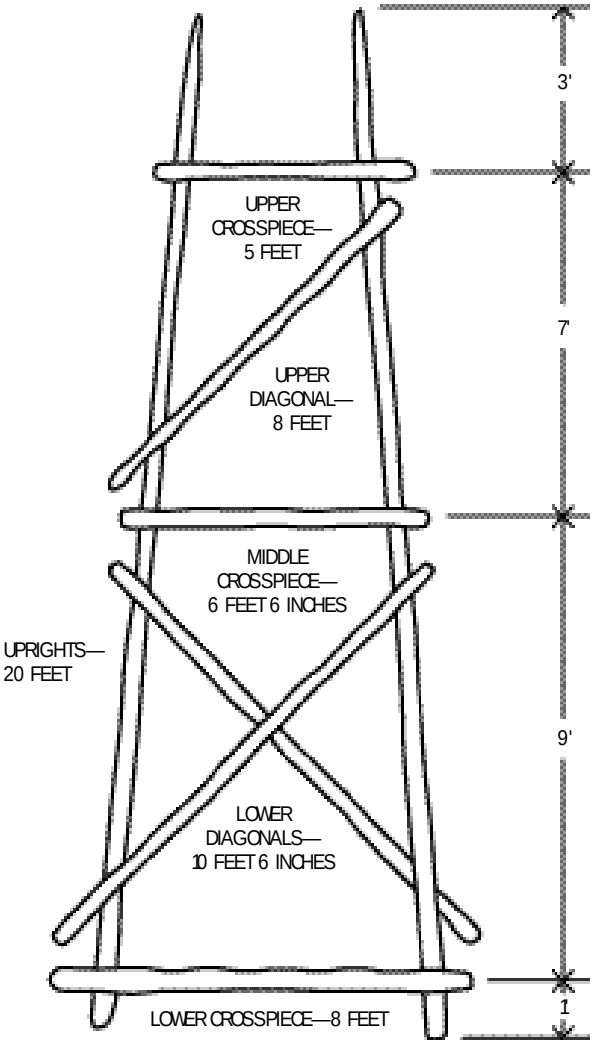

Finished signal tower

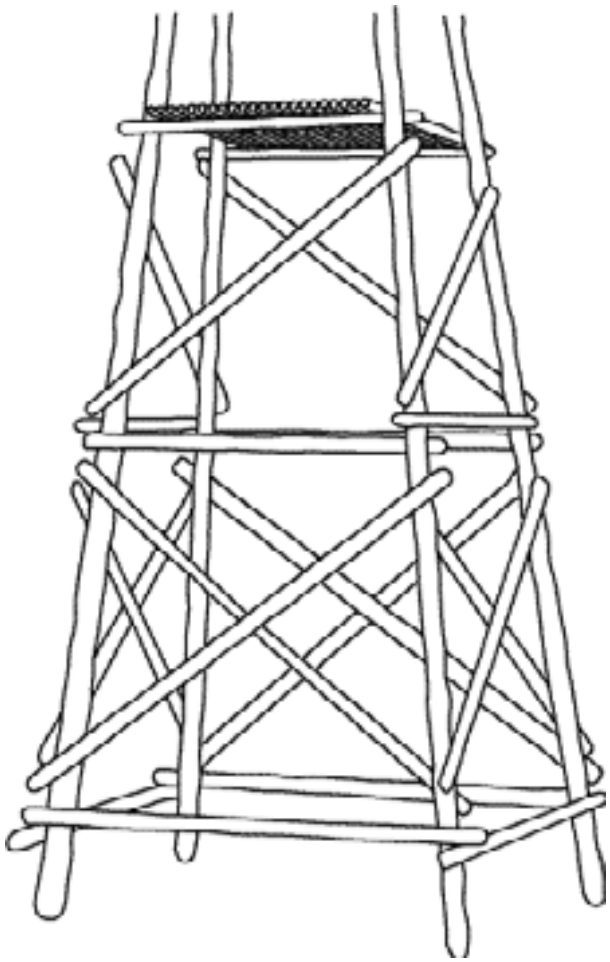

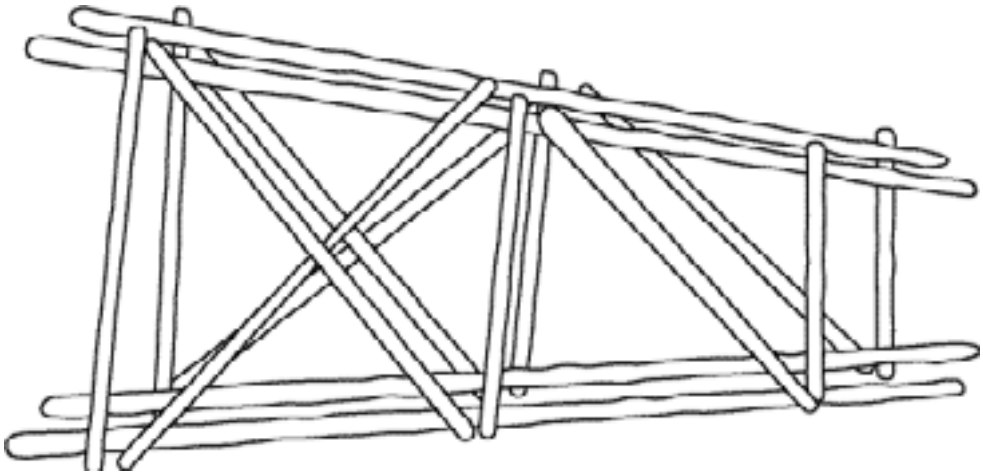

Camp Loom

Devices of this type have been used in camp since the earliest days of Scouting. A loom can be used to make tabletops and shelving with sticks or to weave primitive mattresses and lean-to roofs out of grass thatch, palm leaves, or similar materials.

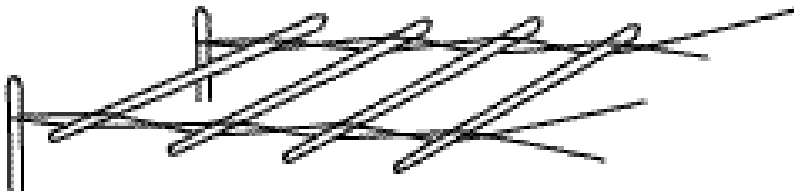

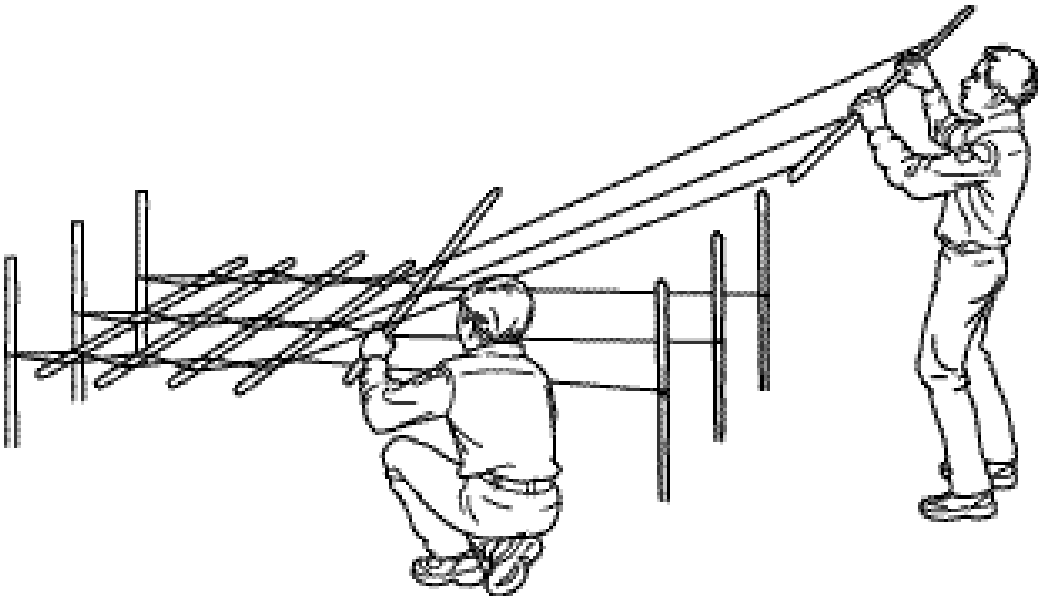

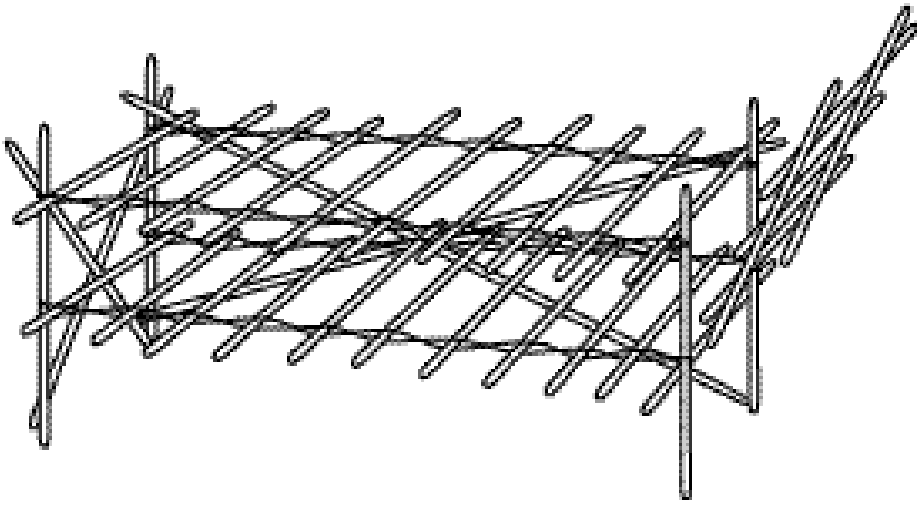

Shed Construction

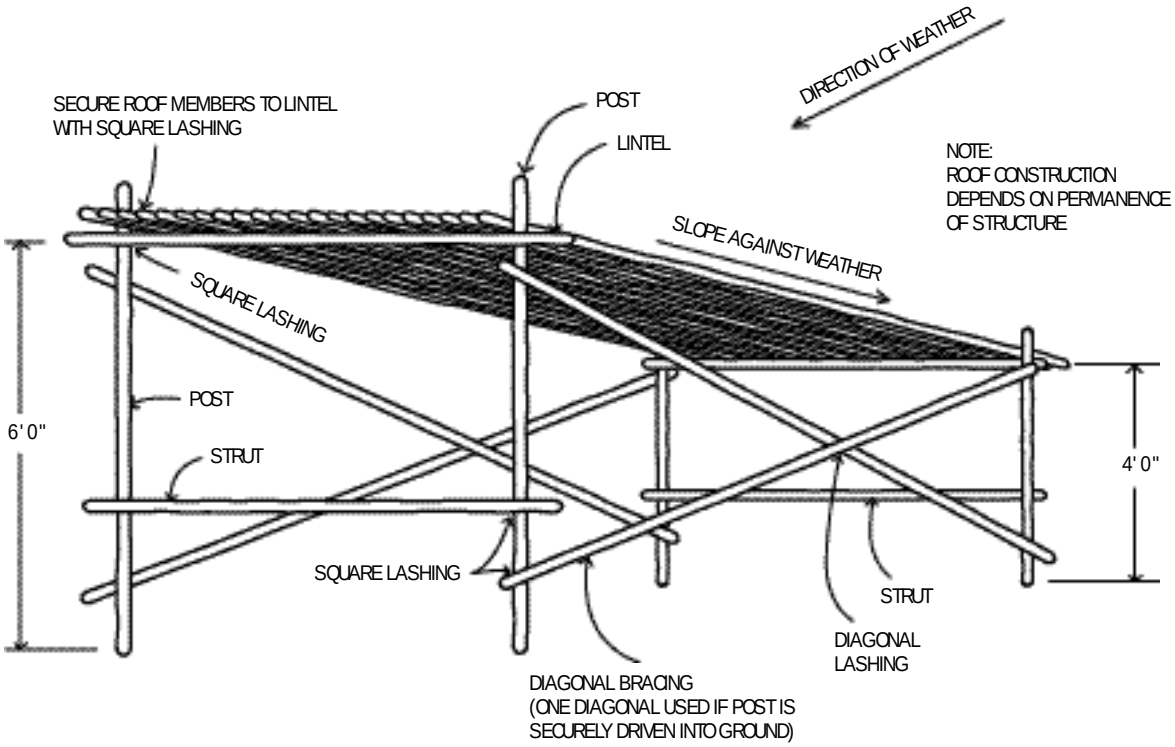

Rope Bridge

Three teams work at the same time:
Team A: Trestle on side number 1
Team B: Trestle on side number 2
Team C: The rope bridge on side number 1

Step 1: Anchorings

1

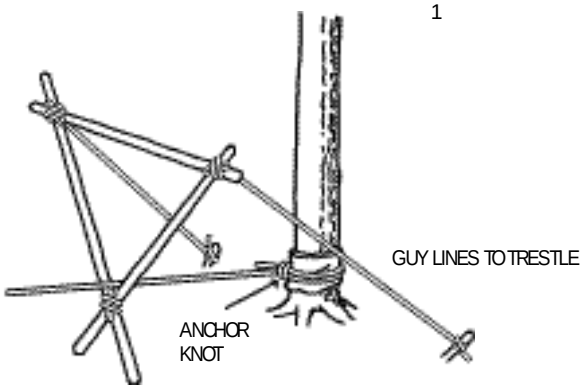

2

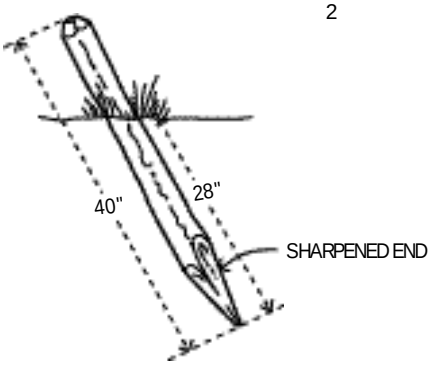

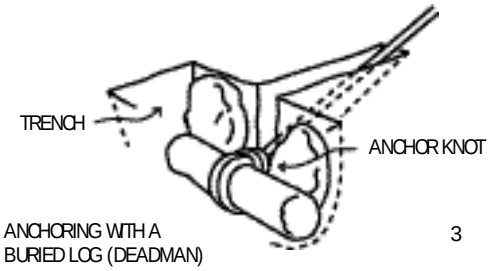

ANCHORING WITH A
BURIED LOG (DEADMAN)

3

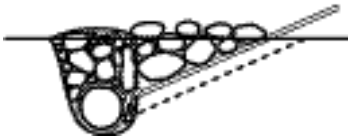

4

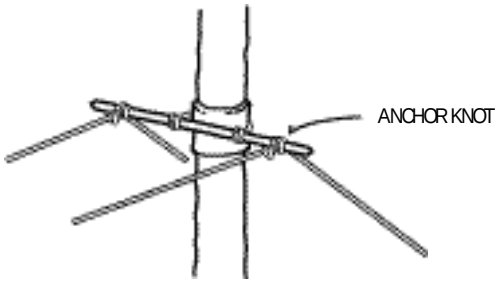

5

6

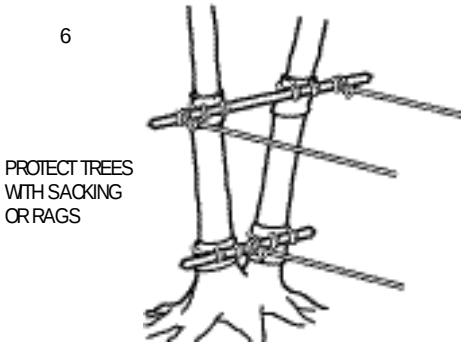

7

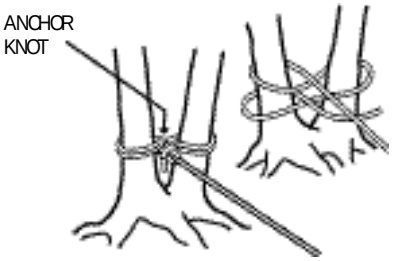

Step 2: Trestles

The most efficient is the triangular trestle. Three poles are carefully lashed. Take care with the angle of the V. (Refer to the illustrations for the proportions.)

The trestles can be replaced by anchoring to trees. (This is quite common.) In this case, two poles lashed to trees will do nicely. Don't forget to protect the trees. Be careful of the elevation of the main support. This should be at least 5 feet above the ground. This will determine the dimensions and placements of the trestles. Install their anchors with great care.

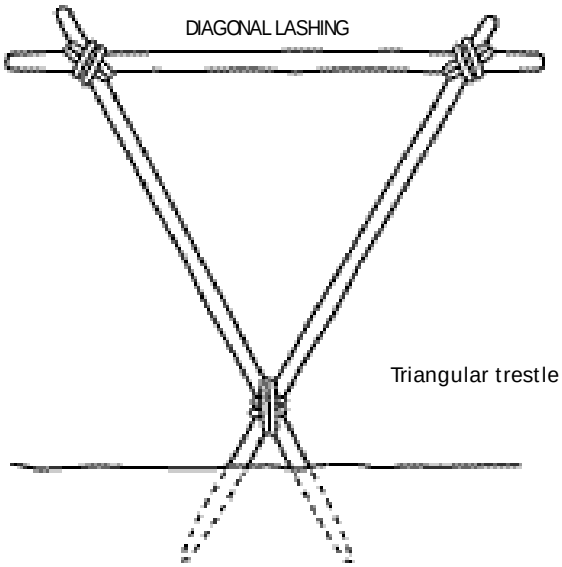

Triangular trestle

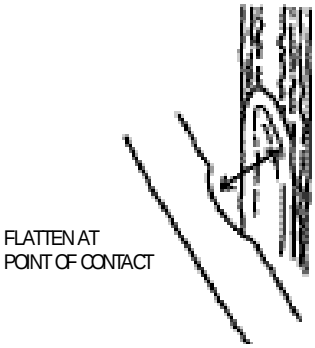

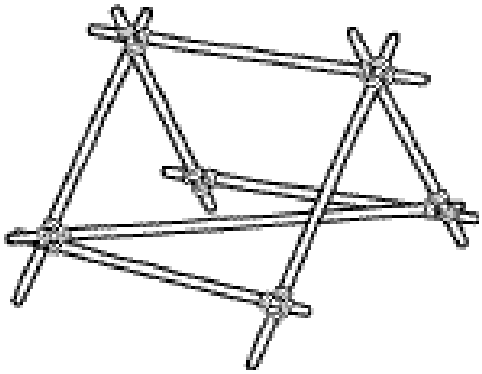

A-frame trestle

Construction

The bridge is constructed flat on the ground. Unroll the ropes and lay them parallel to each other.

1. Place the two struts at each end.
2. Place the center strut.
3. Place the remaining struts.

Be careful of the length of the struts, because they determine the curve of the handrails in relation to the main support.

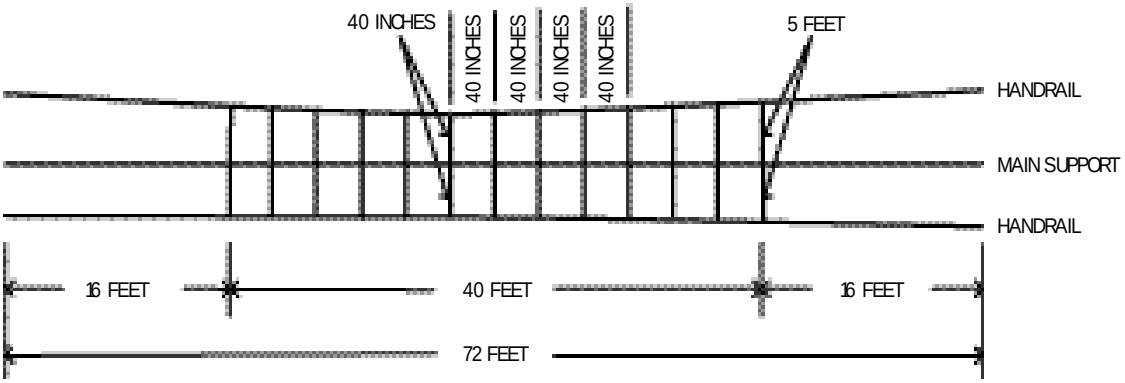

The Finished Bridge

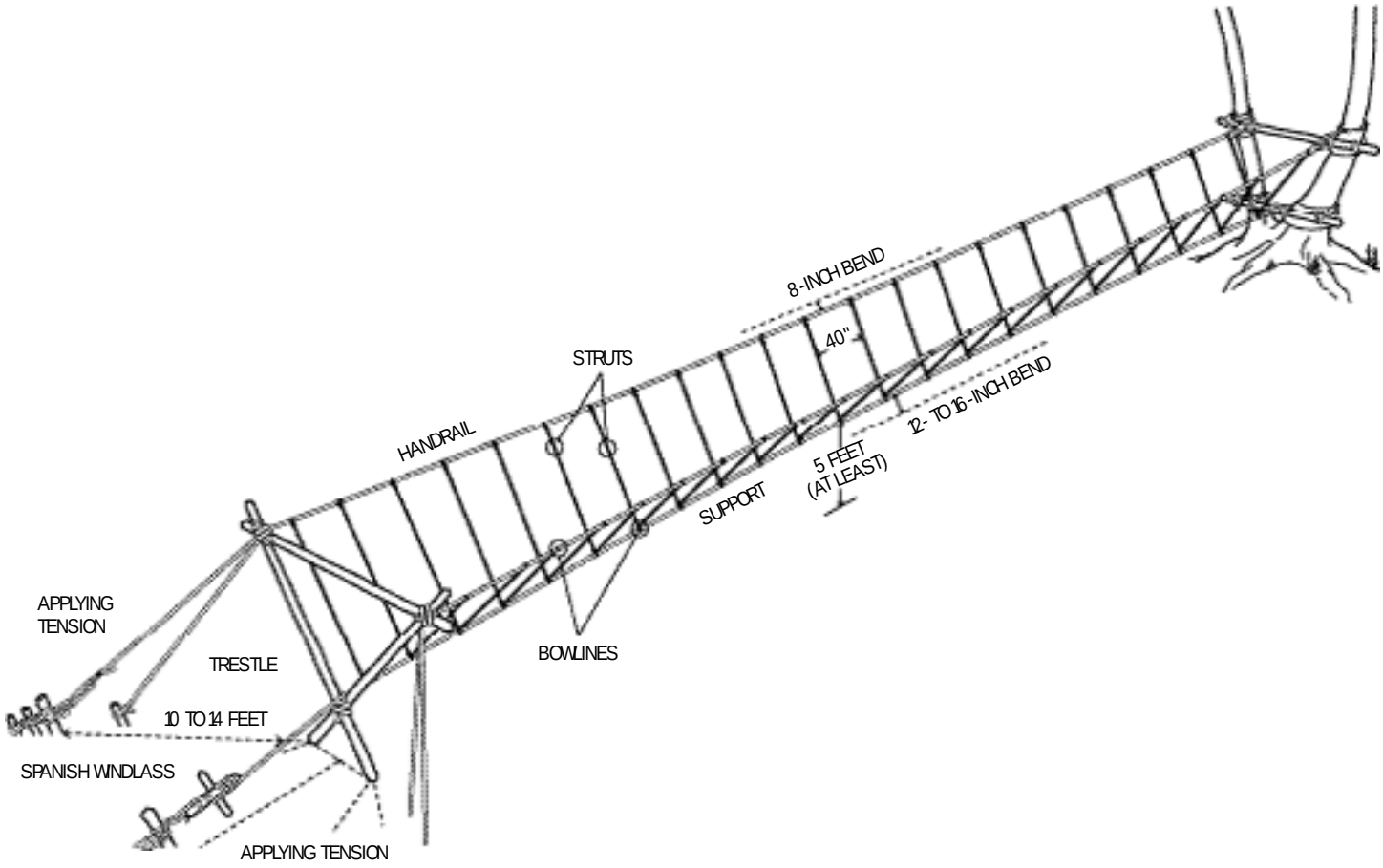

Launching

Good work requires that the free ends of the bowlines on the struts be finished with a whipping.

1. When the bridge is complete, team C ties together one end of the main support and hand rails to the fourth rope.
2. Meanwhile, team A fastens the end of the ball of string to a stick and throws the stick to the other side. Note: Watch the wind direction and throw with it.
3. The other end of the string is fastened to the fourth rope, and team B now hauls the bridge across by drawing in the string, the top, and then the bridge itself. Team A lets the bridge out over the top of the trestle and holds back when necessary to keep the bridge from touching the ground.
4. When the bridge is finally across, teams A and B anchor their respective handrails. One uses the anchor knot, the other the sheepshank with a half-hitch and bowline. All anchorings must be solid and secure.
5. The main support, which is still lying across the top crosspiece of the trestles, is now slipped under it and solidly moored. Put an anchor knot at each end. When the tension is applied, the main support should then get its classic upward curve.

If adjustments need to be made to the struts, team C proceeds across the bridge and makes the necessary finishing touches.

A trained troop (directed by an experienced leader who can supervise and coordinate the work) should complete this bridge in three hours.

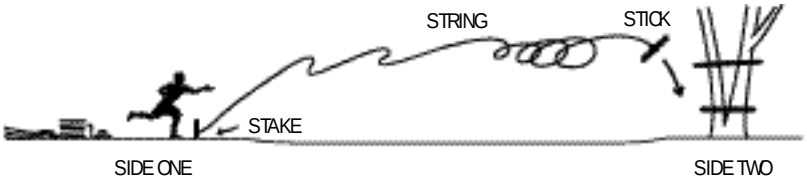

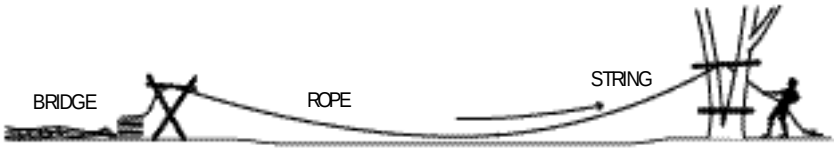

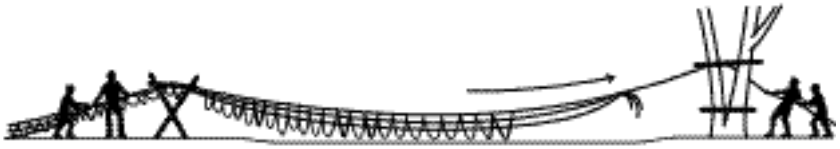

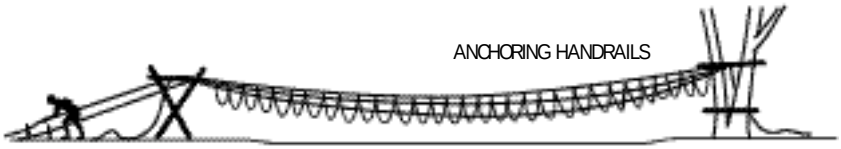

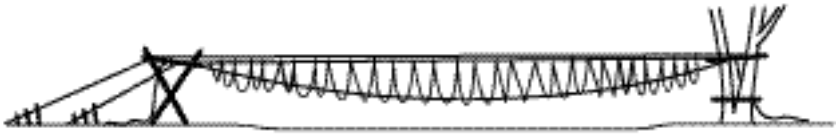

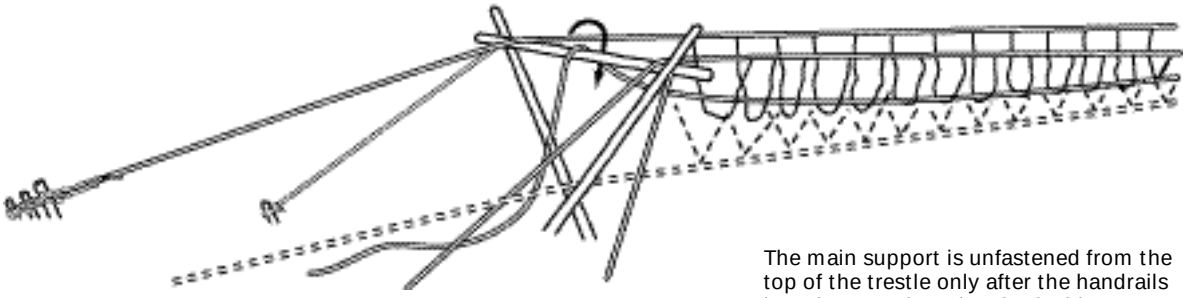

The main support is unfastened from the top of the trestle only after the handrails have been anchored on both sides.

Make Your Own Camp Furniture

Scoutmaster's Chair

Make a comfortable "Scoutmaster's chair" from a piece of heavy canvas or a canvas hammock.

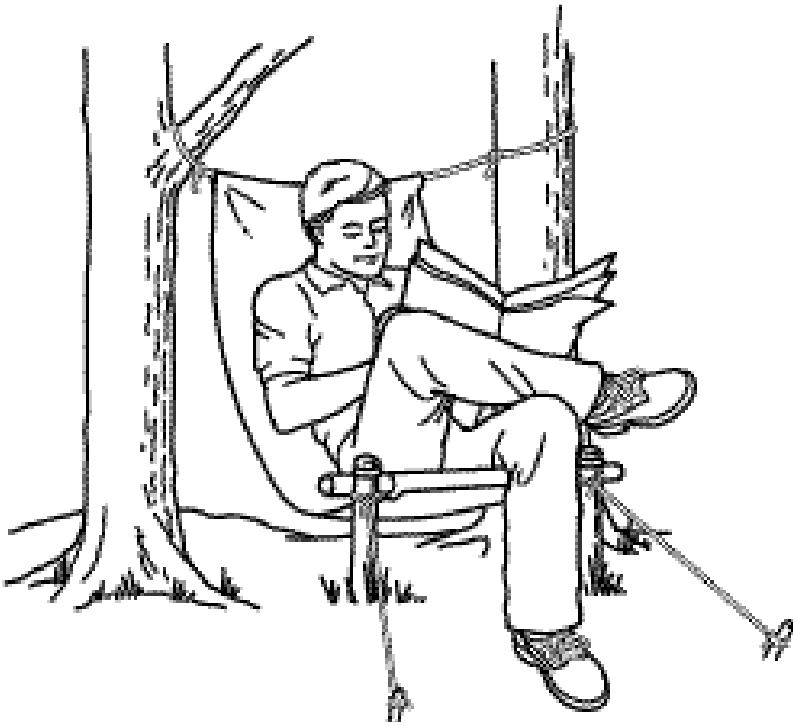

Camp Chair
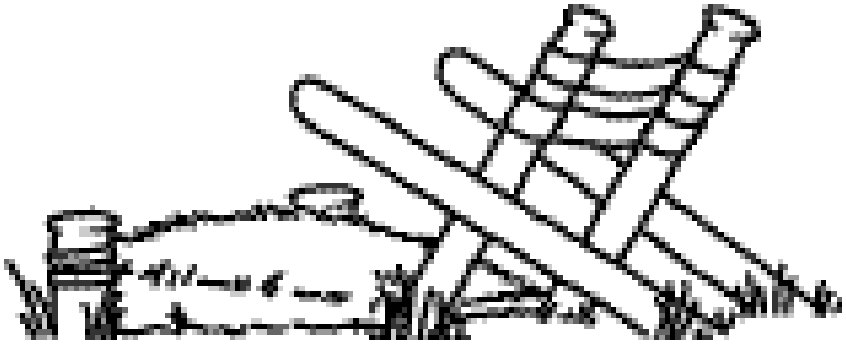
There may not be a rocking chair in camp, but this Scout's chair will give you loads of comfort.